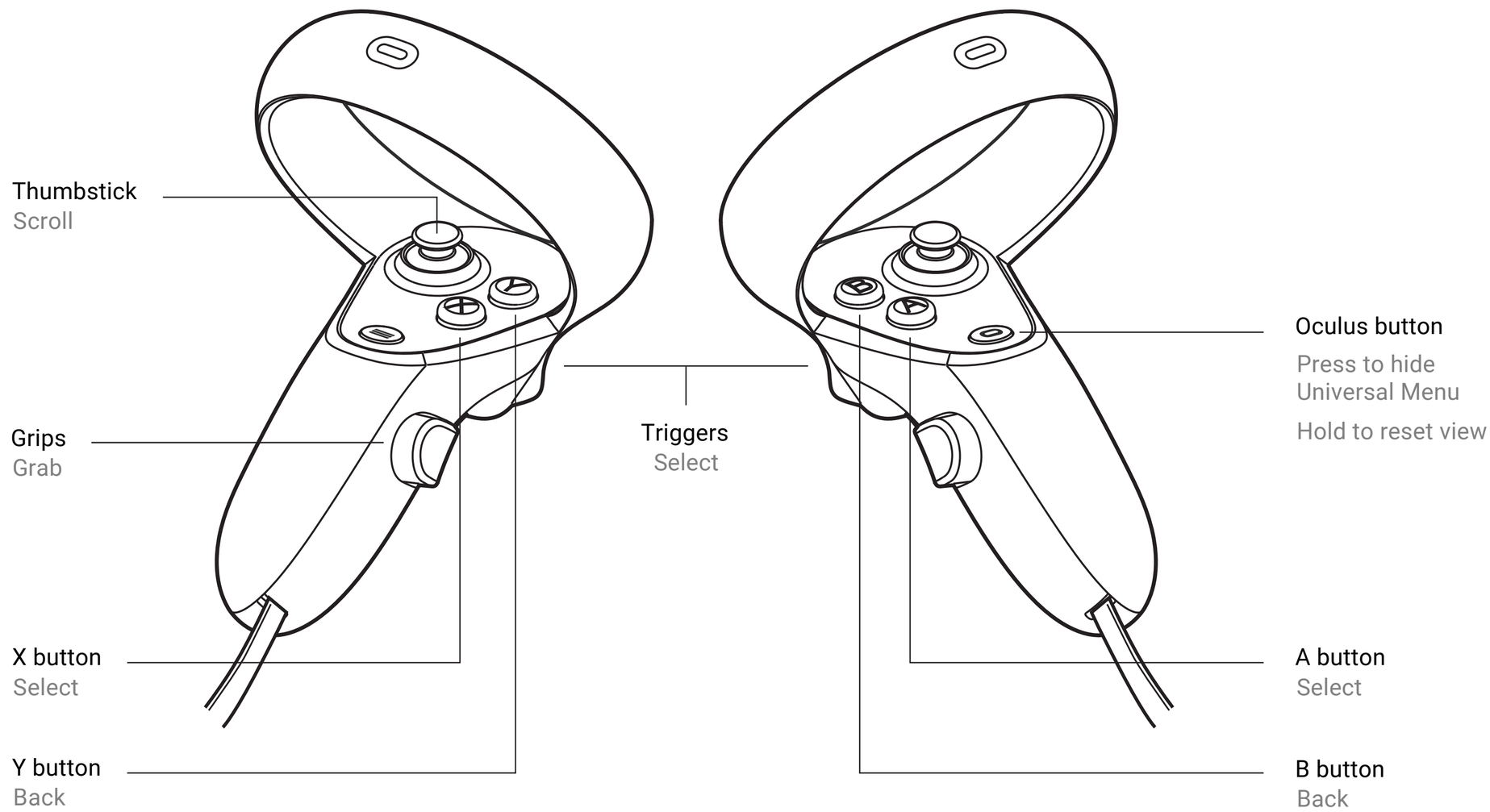
Thumbstick
Scroll
Grips
Grab
X button
Select
Y button
Back
Triggers
Select
Oculus button
Press to hide
Universal Menu
Hold to reset view
A button
Select
B button
Back